SIG-Series

FORCE & DISTANCE MONITORING PRESS

Fluid Power Leveraging with Process Monitoring

air-hydraulics INCORPORATED

THE COST EFFECTIVE AND ENERGY EFFICIENT ALTERNATIVE TO QUALITY CONTROL

OVERVIEW

SIG-Series Force & Distance Monitoring Presses are an excellent choice for today's continual demand for quality manufactured part assemblies. These press packages give the manufacturer the ability to monitor the complete assembly process from start to finish. Each press cycle gives a signature analysis of the press force and press stroke, with the ability to set parameters and monitor critical points along the assembly process. If all parameters are met, the system acknowledges a "pass" press cycle. If any of the parameters are not met, the system acknowledges a "failed" press cycle. Package comes complete with an internal hard drive and Ethernet capability for data collection, allowing each assembly operation to be recorded for quality assurance.

ADVANTAGES

- 120 GB internal SS hard drive
- Windows embedded operating system
- User friendly 10.4" touchscreen colored monitor
- Easy profile and part parameter set-up
- Seamless integration into your manufacturing and quality process systems
- Open architectural designed controls and programming for future integration
- Using an energy efficient / low maintenance air over oil press system
- Can handle up to 100 models
- Manufactured and supported in the U.S.

SPECIFICATIONS

Description	2.5 Ton Press	5.5 Ton Press	10 Ton Press	15 Ton Press
Tons at 100 psi Air	2.5	5.5	10	15
Power Ratio (No. x air line psi = Approx. Force)	50	110	200	300
Max. Ram Stroke	5.1875"	6"	4"	6"
Cubic in. of Pressurized Air Per Full Stroke Cycle	577	1562	1865	4521
Air Cyl. Port Pipe Size - 4 Way Control Valve	.50"	.75"	.75"	1.0"
Return Force @ 100 psi	628	1080	1080	2003
Booster Cylinder				
Inside Diameter	6"	8"	8"	12"
Rod Diameter	2.125"	2.50"	1.875"	3.25"
Stroke	10.250"	15.625"	18.500"	20.187"
Ram Cylinder				
Inside Diameter	3"	4"	4"	5.75"
Bottom Rod Diameter	1.000"	1.500"	1.500"	2.750"
Net Weight	350 lbs.	500 lbs.	500 lbs.	800 lbs.

AIR-HYDRAULIC PRESS

air-hydraulics INCORPORATED

SIG-SERIES PRESS DIMENSIONS

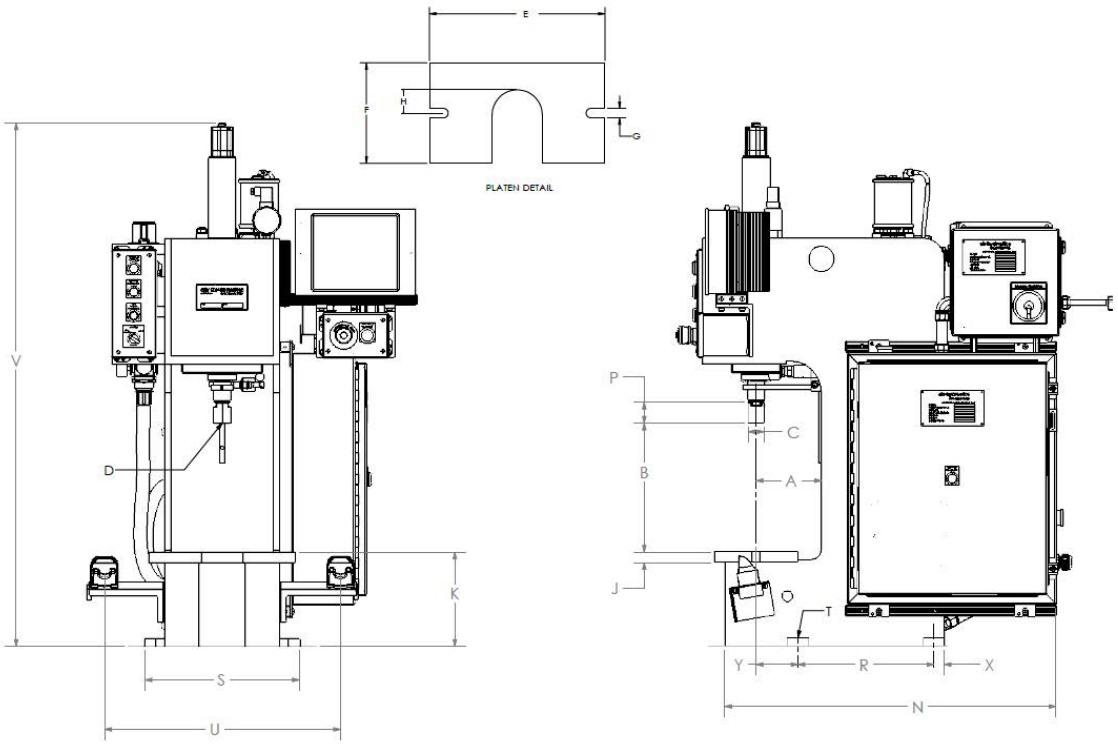

DIM KEY	DESCRIPTION	SIG-250	SIG-300	SIG-400	SIG-500
A	Throat Depth	6.25	6.25	6.25	8.25
B	Daylight	10.00	12.43	12.43	11.00
C	Ram Diameter	1.000	1.500	1.500	2.750
D	Ram Mounting	.625 -11 x 1.25	.625 -11 x 1.25	.625 -11 x 1.25	1.25-12 x 1.88
E	Platen Width	12.50	14.00	14.00	18.00
F	Platen Depth	6.00	8.00	8.00	10.00
G	Platen Slot	0.62 x 1.50	0.75 x 1.50	0.75 x 1.50	1.25 x .88
H	Platen Radius	2.00	2.00	2.00	2.25
J	Platen Thickness	1.00	1.00	1.00	1.25
K	Platen To Floor	7.12	9.00	9.00	9.00
M	Frame Width	9.50	11.00	11.00	15.25
N	Frame Depth	18.00	21.00	21.00	28.00
P	Frame Height	32.12	39.00	39.00	40.00
R	Mounting Hole Depth	10.00	13.00	13.00	16.00
S	Mounting Hole Width	11.25	12.75	12.75	17.00
T	Mounting Hole	0.53	0.62	0.62	0.65
U	Overall Width	23.75*	25.25*	25.25*	29.50*
V	Overall Height	39.50*	46.50*	48.00*	52.00*
W	Overall Depth	20.00*	23.12*	23.12*	29.75*
X	Back Foot Mounting	1.00	1.00	1.00	1.25
Y	Front Foot Mounting	5.00	4.00	4.00	6.75

** Denotes Approximate Dimensions*

SIG-Series

FORCE & DISTANCE MONITORING PRESS

air-hydraulics INCORPORATED

SIG-SERIES MODELS

Our objective is to offer you a solution to your assembly and forming needs. If our standard features or available options do not meet your application requirements, please consult our factory to see about us offering an affordable solution to meet your design needs.

STANDARD FEATURES

- No Hydraulic Power Unit or Electric Motor Needed
- Full Length Hydraulic Controlled Power Stroke
- Compression Load Cell to Monitor Pressing Load
- Linear Position Transducer to Monitor Press Travel Distance
- Fully Integrated Touchscreen Color Monitor Windows with Operating System Delivering "Real-Time" Pass/Fail Feedback, Waveforms, Histograms, Trends, and Part History
- Ethernet Compatible for Seamless Integration into your Manufacturing and/or Quality Process
- Ability to Easily Set-Up Application / Pass-Fail Parameters Throughout the Complete Press Cycle - for up to 100 Models

AVAILABLE OPTIONS

- Matching Floor Stand or One Piece Floor Models
- Increased Stroke Lengths
- Press Frame Modifications
- 2-Post or 4-Post Press Design
- Press Guarding and Light Curtain Packages
- Adjustable Operator Workstation with Machine Arm, Keyboard and Mouse Option
- Additional Monitoring Channels Available
- QualityWorks Data Collection Software
- Custom Tooling and Fixture Packages

OPERATION

When the actuators are initiated, the press valve is energized and the monitor's internal timer starts the monitoring process. Air enters the booster cylinder, extending the booster piston and transfers oil into the ram cylinder, extending the cylinder rod. Hydraulic pressure is maintained throughout the entire stroke, not just a limited part of the stroke. When the monitor's timer is complete, the valve shifts, and the cylinder rod retracts to full home position. A complete signature analysis of the press cycle is captured and displayed on the monitor, verifying a pass or failed assembly. Data collection is stored on the internal hard drive for review.

ISO 9001 REGISTERED (WITH DESIGN)

Air-Hydraulics is committed to delivering quality products on time to achieve customer satisfaction. Air-Hydraulics uses a process approach to achieve this policy in accordance with ISO 9001 and is committed to continually improve at this process.

MODEL SIG-250

2.5 TONS
@ 100 psi of Factory Supplied Air

5-3/16" Overall Stroke

10.00" Daylight Opening

6.25" Throat Depth

MODEL SIG-300 With Rotary Table

5.5 TONS
@ 100 psi of Factory Supplied Air

6.00" Overall Stroke

12.43" Daylight Opening

6.25" Throat Depth

MODEL SIG-400

10 TONS
@ 100 psi of Factory Supplied Air

4.00" Overall Stroke

12.43" Daylight Opening

6.25" Throat Depth

MODEL SIG-500

15 TONS
@ 100 psi of Factory Supplied Air

6.00" Overall Stroke

11.00" Daylight Opening

8.25" Throat Depth